A JAMB AND DOOR STILE

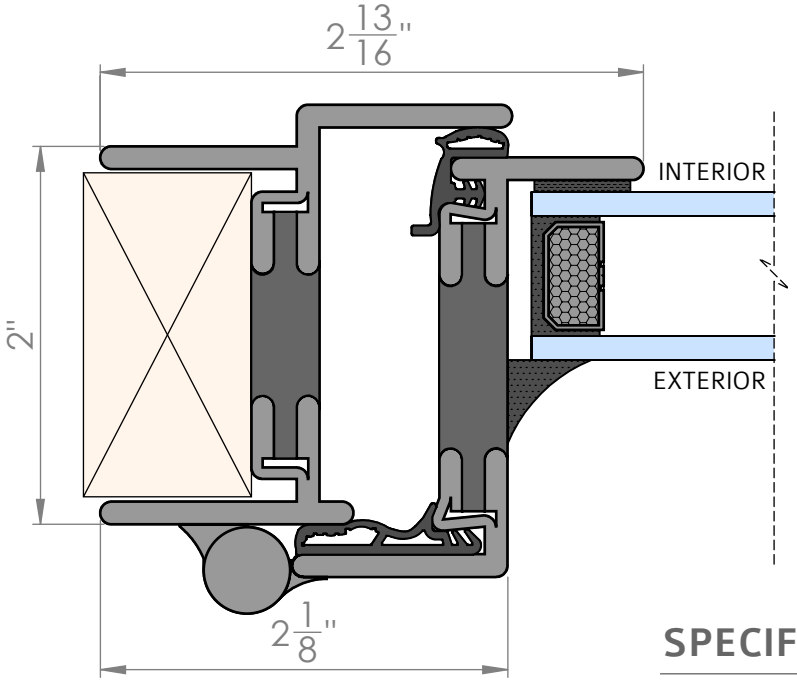

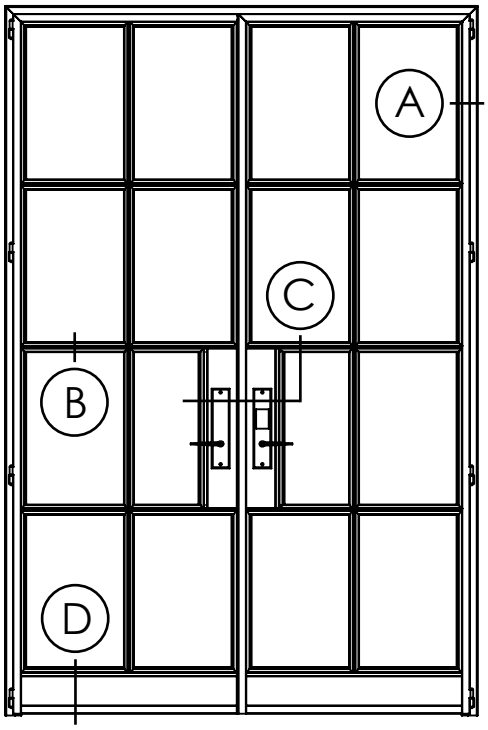

B MUNTIN

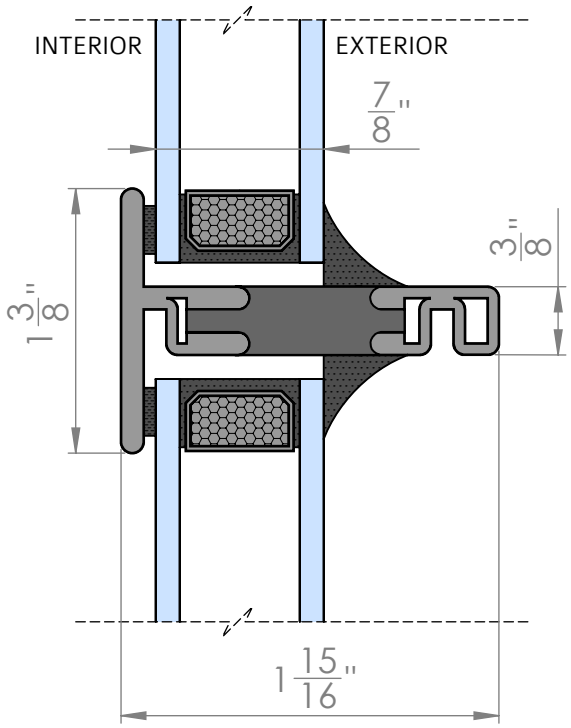

SPECIFICATIONS

COLD ROLLED GALVANIZED STEEL WITH POLYURETHANE ISOLATOR

- Frame Depth - 2″
- Muntin Face - 1-3/8″
- Muntin Depth - 1-15/16″
- Swing Out or Swing In
- 3″ Welded Steel Bullet Hinges

GLAZING

- 7/8″ Clear Insulated Glass
- Black IGU Spacer Bar
- Silicone & Mechanical Glaze Options
- True Divided Lites

DOOR SEAL

- Mechanically Fixed Rubber Gaskets

FINISH

- Epoxy Primer w/ Polyurethane Paint

HARDWARE

- Mortise Entry Set
- Standard 2-3/4″ Backset
- Matching Dummy Set
- Top & Bottom Flush Bolts on Passive Door

THE INFORMATION CONTAINED IN THIS DRAWING IS THE SOLE PROPERTY OF WELLBORN+WRIGHT. ANY REPRODUCTION IN PART OR AS A WHOLE WITHOUT WRITTEN PERMISSION OF WELLBORN+WRIGHT IS PROHIBITED.

Ⓒ LOCKBOX

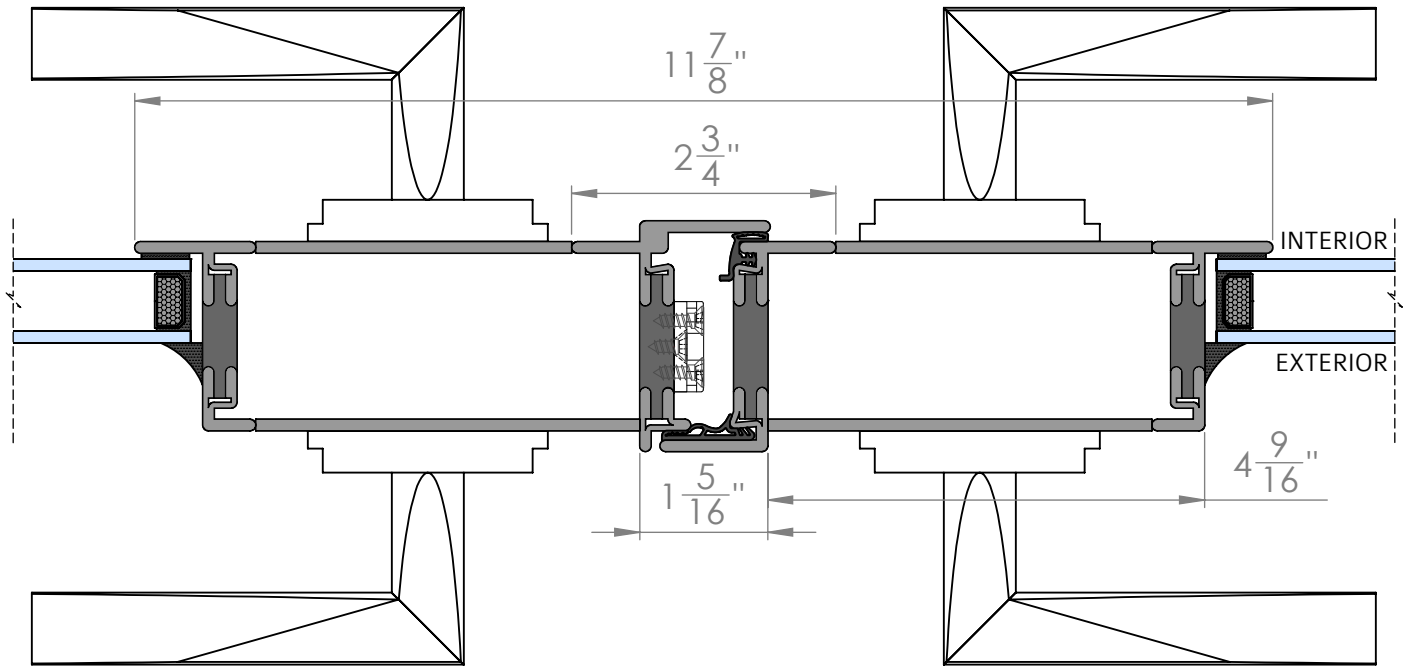

Ⓓ KICKPLATE

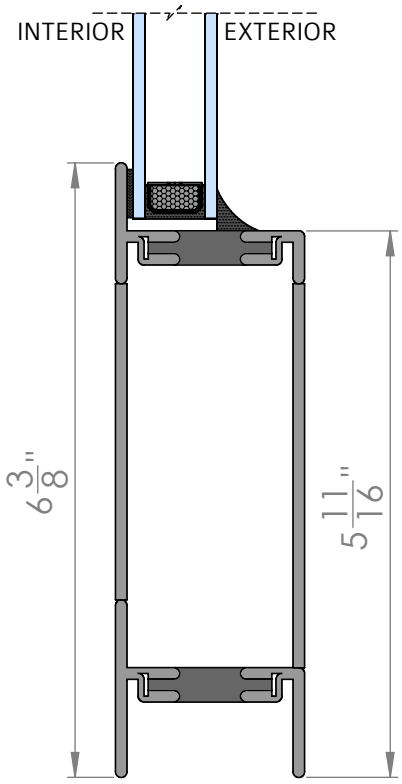

THE INFORMATION CONTAINED IN THIS DRAWING IS THE SOLE PROPERTY OF WELLBORN+WRIGHT. ANY REPRODUCTION IN PART OR AS A WHOLE WITHOUT WRITTEN PERMISSION OF WELLBORN+WRIGHT IS PROHIBITED.